CARBON TRUST

Heating, ventilation and air conditioning (HVAC) equipment

A guide to equipment eligible for Enhanced Capital Allowances

Contents

Introduction

Enhanced Capital Allowances (ECAs) are a straightforward way for a business to improve its cash flow through accelerated tax relief. The scheme encourages businesses to invest in energy saving plant or machinery specified in the Energy Technology List (ETL) to help reduce carbon emissions, which contribute to climate change.

The ETL is a register of products that may be eligible for 100% tax relief under the ECA scheme for energy saving technologies[1]. The Carbon Trust manages the list and promotes the ECA scheme on behalf of government.

This leaflet gives an overview of equipment specified in the heating, ventilation and air conditioning category on the ETL and illustrates the reductions in energy bills that can be realised by investing in qualifying ETL energy saving equipment over non-qualifying equipment.

Background

The ETL comprises two lists: the Energy Technology Criteria List (ETCL) and the Energy Technology Product List (ETPL). The ETCL defines the performance criteria that equipment must meet to qualify for ECA scheme support; the ETPL is the list of products that have been assessed as being compliant with ETCL criteria.

Further information

For more information on HVAC, visit www.carbontrust.com/resources/reports/advice/technology-and-energy-management-publications or download the Carbon Trust's Heating, ventilation and air conditioning overview (CTV046)

Setting the scene

Heating, ventilation and air conditioning (HVAC) equipment can be used for a range of environmental conditioning and control applications in buildings. It includes equipment that provides heating, cooling and ventilation and equipment that allows the environmental conditions in a zone (specific controlled area) to be independently controlled to meet the desired conditions. This allows environmental parameters such as internal air temperature, relative humidity and ventilation to be controlled in relation to thermal heat gains and losses and occupancy patterns.

Close control air conditioning equipment is used to control the temperature (and relative humidity where necessary) in rooms and enclosures containing heat generating equipment, such as servers, computers or telecommunications devices, and in some types of manufacturing process (e.g. clean rooms).
Other applications include:

- rooms or buildings that contain temperature and humidity sensitive equipment such as calibration and test areas.
- processes which require clean environments, for example electronics and pharmaceutical manufacturing.

Close control air conditioning equipment is often used in areas that require constant high levels of cooling and therefore use large amounts of energy. The use of energy efficient close control air conditioning equipment, such as that listed on the ETL, can result in significant energy savings and, therefore, reduced energy bills.

In buildings without individual zone control, levels of heating and/or cooling can be the same throughout the building. This can result in large amounts of energy wastage and associated high CO_2 emissions.

Splitting the building into a number of separate zones can provide control that more closely matches the desired conditions and actual occupancy patterns. The selection of control zones will be influenced by the following:

- Internal heating/cooling requirements based on the number of occupants, amount of office/IT equipment and other sources of heat in different areas of the building.
- Occupancy patterns – whether separate parts of the building are occupied for different time periods, for example, a single area with 24-hour occupancy or evening work.

[1] Eligibility for ECAs is based on a number of factors. Visit http://etl.decc.gov.uk/etl to find out more.

- External heat gains – increased solar gain on southerly facing areas of the building.

The technologies specified in the HVAC category are:

- HVAC zone controls.
- Close Control Air Conditioning Equipment.

Other HVAC technologies, such as boilers, optimising controls, heat pumps and chillers, are described in other technology areas of the ETL.

The level of energy savings resulting from the use of zone controls will depend on the specific application, however, properly installed and commissioned controls typically provide energy savings of around 20%[2] over systems without this level of control. In recognition of this, The Building Regulations *Approved Document L2A (ADL2A). – Conservation of fuel and power in new buildings other than dwellings (2010)* advises that, in order to achieve compliance, HVAC systems should be sub-divided into separate control zones to correspond to each area of the building that has a significantly different solar exposure or pattern or type of use. Each separate control zone should be capable of independent timing and temperature control and, where appropriate, ventilation and air circulation rate. Also if heating and cooling are provided in the same zone, they should be controlled so as not to operate simultaneously. In addition, they should also meet the specific control and efficiency standards are laid out in the 2010 Non-Domestic Building Services Compliance Guide (NDBSGC).

For existing buildings, *Approved Document L2B (ADL2B) – Conservation of fuel and power in existing buildings other than dwellings* requires this level of zone control where work involves the provision or extension of controlled services (i.e. HVAC systems).

It should be remembered that the control specifications in the ADLs and NDBSGC are minimum standards and those listed in the ETL have far more functionality.

HVAC zone controls can also help optimise occupant comfort, health and productivity. In a building with a single control zone, areas within the building may be either over-heated or under-cooled. This will cause occupants discomfort and have a detrimental impact on their productivity. By splitting the building into an appropriate number of control zones, the comfort of the occupants can be improved, which normally results in increased productivity.

The functionality of an HVAC zone controller will depend on the specific intended application; however, an example zone controller is shown below.

Figure 1 *Schematic of a zone controller*

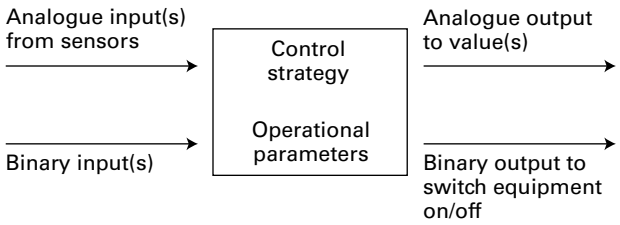

The HVAC zone controller will have a factory-set control strategy for each function. There will also be manual settings for variable operational parameters, which are initially set during the commissioning stage. Examples include zone occupation times, desired internal temperatures and levels of ventilation. The zone controller will have one or more control inputs such as that from an internal air temperature sensor (analogue input) and/or binary inputs, for example from an occupancy presence detector. Control outputs can include analogue outputs (for example, a control signal to adjust the position of a valve) or binary outputs to switch an item of equipment on or off.

Some zone controllers can be connected together using a communications network, to an overall controller. This allows the sharing of data, for example, readings of external air temperature can be shared between individual zone controllers on a network.

Benefits of purchasing ETL listed products

Close control air conditioning products listed on the ETL can use significantly less energy than non-ETL listed products. ETL listed products achieve a higher overall energy efficiency by using more efficient components such as compressors, heat exchangers and controls, and may also incorporate free cooling coils.

HVAC zone control products listed on the ETL are those that facilitate a more efficient operation of HVAC systems to ensure that energy is consumed only when required, reducing energy waste and CO_2 emissions. An average site can potentially achieve energy savings of between 8% and 30%[2,3] through correct application of ETL listed HVAC zone controls.

When replacing equipment, businesses are often tempted to opt for that with the lowest capital cost; however, such immediate cost savings can prove to be a false economy. Considering the life cycle cost before investing in equipment can help reduce costs and improve cash flow in the longer term.

The ECA scheme provides businesses with 100% first year tax relief on their qualifying capital expenditure. This means that businesses can write off the whole cost of the equipment against taxable profits in the year of purchase. This can provide a cash flow boost and an incentive to invest in energy saving equipment which normally carries a price premium when compared to less efficient alternatives.

This leaflet also illustrates the reductions in energy consumption, carbon emissions and energy bills that can be realised by investing in qualifying ETL energy saving equipment over non-qualifying equipment.

Important

Businesses purchasing equipment must check the ETPL at the time of purchase in order to verify that the named product they intend to purchase is designated as energy saving equipment. HVAC zone control equipment that meets the ETL eligibility criteria but is not listed on the Energy Technology Product List (ETPL) at the time of purchase is not eligible for an ECA.

HVAC equipment eligible under the ECA scheme

HVAC equipment eligible under the ECA scheme includes the following two categories; HVAC zone control equipment and close control air conditioning equipment. These are described below.

HVAC zone controls[4]

The ECA Scheme covers HVAC zone controls that are specifically designed to automatically control in an energy efficient manner, the amount of heating, cooling, ventilation or air conditioning that is applied to individual rooms or defined areas within a building, known as "zones". In general, these controls are applied to five types of HVAC equipment:

- Wet (hydronic) heating systems.
- Underfloor or storage heating – wet systems and electric heating.
- Ventilation.
- Air conditioning and comfort cooling.
- Chilled water systems.

NOTE: In practice many zone controls may regulate more than one system within the zone, i.e. both the heating and ventilation; however, this will depend on the specific application.

Wet heating system

The use of zone controls for hydronic heating systems is important to ensure that overheating is avoided. ETL compliant zone controls can be applied to constant and variable flow approaches to wet heating system control.

The schematic diagram below illustrates the use of a zone controller applied to a constant volume/variable temperature zone heating circuit.

2 CTL025 – 'How to implement electric heater controls', Carbon Trust, www.carbontrust.com;

3 CTV032 – 'Building controls - Realising savings through the use of controls', Carbon Trust, August 2007, www.carbontrust.com;

4 The descriptions of the HVAC zone controls given in this leaflet are examples only and do not constitute ECA eligibility. The formal criteria and details governing the ECA scheme can be found at http://etl.decc.gov.uk/et

Figure 2 *Constant volume/variable temperature zone heating circuit*

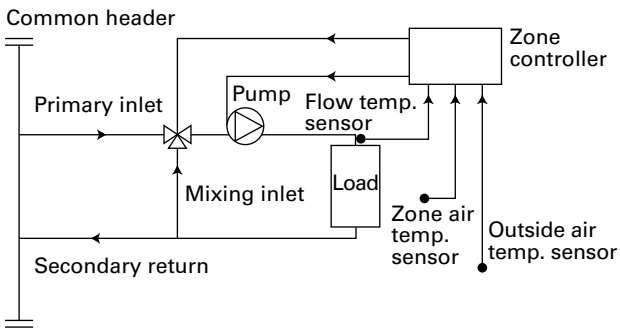

With this approach, the zone controller will activate the heating circuit based on the set time schedule for the zone. This allows different time schedules for different zones. The temperature of the water flowing through the heat emitters (e.g. radiators) is regulated by the zone controller based on the internal air temperature and an outside air temperature sensor. This type of weather compensation is a requirement for ETL compliant products.

Other features of ETL compliant products include optimum start. This activates the heating circuit at an early enough time in the morning to ensure that the zone air temperature reaches the desired set-point by the beginning of occupancy and not several hours earlier.

ETL compliant zone controls can also control non-hydronic heating systems including electric storage heating, gas-fired convection heaters and gas-fired radiant heaters.

For the installation of wet heating zone controls where none previously existed within a typical 1,000m^2 naturally ventilated cellular office building, using 151kWh/m2/year for space heating, the potential annual savings at 20% are calculated as:

- £908.
- 30,200kWh.
- 5.5 tonnes CO_2.

Underfloor heating

Underfloor heating systems can be used in buildings where there is a danger of people injuring themselves, where there is a risk of vandalism, and in areas that require visually unobtrusive heat emitters. Figure 3 shows a simplified two-zone underfloor hydronic heating system. Each heating zone has its own controller that allows for the independent regulation of the heated water in response to the internal air temperature and a defined occupancy time schedule.

Figure 3 *Hydronic underfloor heating*

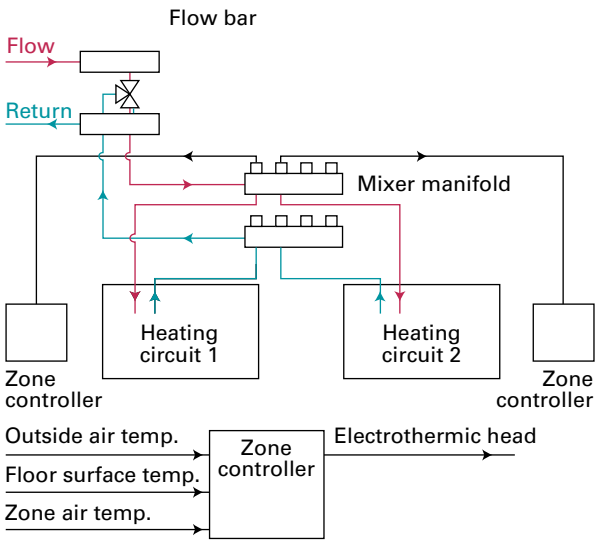

The alternative to hydronic underfloor heating is electric underfloor heating, provided by coils buried in the floor. This can either be controlled by the zone temperature or by varying the current supplied to the underfloor heating circuit. A zone high-temperature override disables the electrical control signal when the air temperature in the zone rises above a certain temperature. In order to avoid damaging the floor surface a high-temperature override disables the electrical current when the floor temperature rises above a temperature set-point.

For the installation of electric underfloor heating zone controls where none previously existed within a typical 1,000m^2 naturally ventilated cellular office building, using 151kWh/m2/year on heating, the potential annual savings at 20% are calculated as:

- £2,718.
- 30,200kWh.
- 15.8 tonnes CO_2.

Ventilation

With improvements in building fabric insulation and levels of air-tightness (reduced air infiltration), the relative contribution that ventilation makes to a building's energy consumption is increasing. The ventilation to a zone can be controlled by the following means:

- Time schedules – this is the most basic level of automatic control and allows for automatic switch on/off in relation to set occupancy patterns. This form of control is suitable where the level of occupancy is fairly consistent and/or predictable. Where this is not the case, ventilation control can be improved by using zone controls that allow the occupants to alter the fan speed and hence vary the ventilation rate.
- Occupancy detection – this allows for the automatic switch on/off of the ventilation system if occupancy is detected in the zone. This helps to reduce energy consumption by ensuring that the ventilation system only operates when the zone is occupied. There is a range of occupancy detection products, the most common being passive infrared (PIR). Occupancy detection can be suitable for zones that are intermittently occupied. Examples include conference facilities and storage areas.
- Demand-controlled ventilation – this approach allows for the optimisation of energy consumption and indoor air quality. Typically, levels of metabolic CO_2 are measured and used as a control input (the greater the occupancy density, the higher the level of CO_2). The speed of the ventilation fan is controlled to give a desired level of CO_2. Demand-controlled ventilation is suitable when levels of occupancy within the zone are highly variable and where good indoor air quality is important (for example in a conference room). Figure 4 illustrates the control of a demand-controlled ventilation system.

Figure 4 *Demand-controlled ventilation*

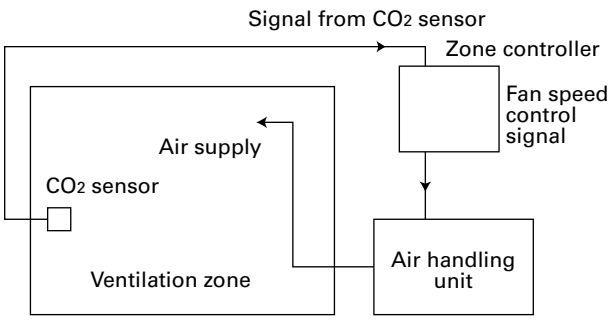

For installation of ventilation zone controls where none previously existed within a typical 5,000m² air-conditioned office building, using 109kWh/m2/year electricity and 178kWh/m2/kWh of gas for space heating and cooling, the potential annual savings at 20% are calculated as:

- £3,030.
- 57,400kWh.
- 17.9 tonnes CO_2.

Air conditioning and comfort cooling

There are a wide range of air conditioning and comfort cooling systems, including constant air volume systems, variable air volume systems (VAV), fan coils and heat pumps.

As with hydronic heating systems, zone controls can play an important role in ensuring that air conditioning and comfort cooling systems maintain desired internal conditions without wasting energy.

The schematic diagram below illustrates the control of a fan coil unit (waterside control).

Figure 5 *Fan coil unit (waterside control)*

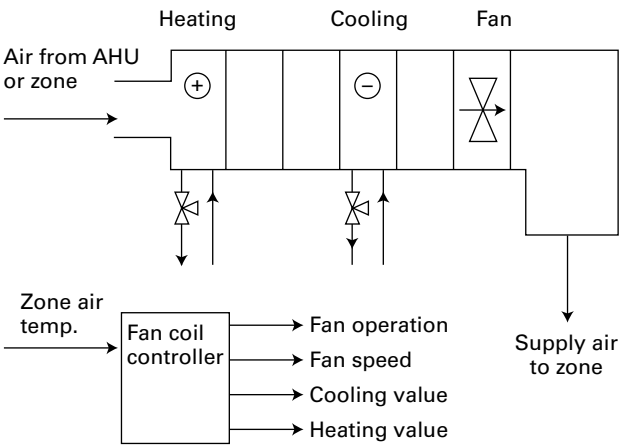

A fan coil unit provides heating and cooling to the surrounding zone, whilst aiding zone air distribution. Outside air can be supplied to the unit or the zone either directly from outside, or from an air handling unit. The unit incorporates a fan, a heating coil and a chilled water-cooling coil, and also induces air from the surrounding zone. The coils are controlled to achieve the required supply air temperature to the zone; if supplied with water they utilise three-port mixing valves in a diverting application to obtain the required heating/cooling effect. The operation of the coils is sequenced so that heating and cooling are never provided at the same time. The fan can either be:

- constant speed;
- two-speed; or
- variable speed.

Variable speed control can be achieved with the use of DC electric motors to drive the fan.

For the installation of cooling system zone controls where none previously existed within a typical 1,000m^2 air-conditioned office building, using 109kWh/m2/year electricity for space cooling, the potential annual savings at 20% are calculated as:

- £1,962.
- 21,800kWh.
- 11.4 tonnes CO_2.

Chilled water systems

Chilled water systems comprise chillers that generate chilled water and their associated equipment such as heat rejection units and pumps. By their nature, chilled water systems are centralised and usually located in a plant room. The generated chilled water is distributed to items of equipment such as fan coil units, close control air conditioning equipment and chilled ceilings/beams located throughout a building. Chillers are normally supplied with controls already installed and configured by the manufacturer. It is the supply of chilled water produced by a chiller that is controlled at the zone level by zone controllers.

Information for purchasers

For further information about the ECA scheme, the Energy Technology List (ETL) and other Technology Information Leaflets in the series please visit http://etl.decc.gov.uk/etl or contact the Carbon Trust on +44 (0)207 170 7000 or email info@carbontrust.com.

Close control air conditioning equipment

Close control air conditioning equipment is designed to control the temperature in rooms and enclosures containing heat-generating equipment, or processes with high sensible heat loads. It also offers the option to control relative humidity. ETL listed close control air conditioning products must have a sensible cooling capacity to total cooling capacity ratio of at least 90%.

Close control air conditioning units are typically used:

- in rooms containing servers or other computer, electronic and telecommunications related equipment; or
- where temperature sensitive industrial or laboratory processes are carried out.

This equipment often operates continuously and has a much higher sensible cooling load requirement per unit floor area than conventional air conditioning applications.

Close control air conditioning accounts for around 40% of all UK packaged air conditioning energy consumption and around 20% of the entire air conditioning sector[5].

Energy savings may be delivered by selecting more energy efficient close control air conditioning products. Manufacturers can make more energy efficient products by using more efficient components such as fans and fan motors, compressors, electronic expansion valves and larger heat exchangers, and by incorporating free cooling coils.

Close control air conditioning products may either consist of a single-packaged unit, or two or more factory built sub-assemblies that are designed to be connected together during installation. A unit may contain an electrically powered compressor(s) and/or incorporate a chilled water cooling coil for connection to an external chilled water (CHW) circuit.

Close control air conditioners containing an electrically powered compressor

The diagrams below show a number of potential different configurations for close control air conditioning equipment that incorporates an electrically powered compressor.

***Figure 6** Direct expansion system (DX) air cooled (without free cooling) close control air conditioning units*

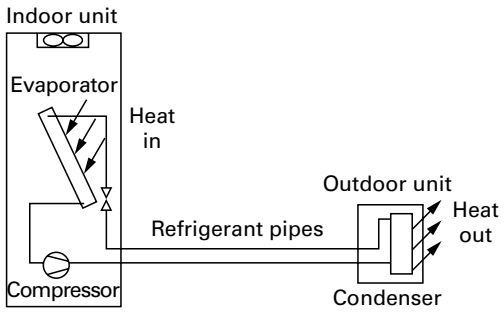

***Figure 7** DX air cooled with integral chilled water free cooling coil(s) close control air conditioning units*

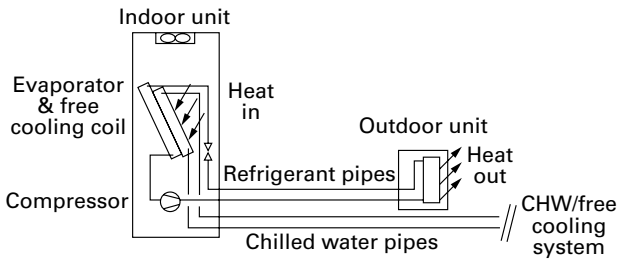

***Figure 8** DX water cooled (without free cooling) close control air conditioning units*

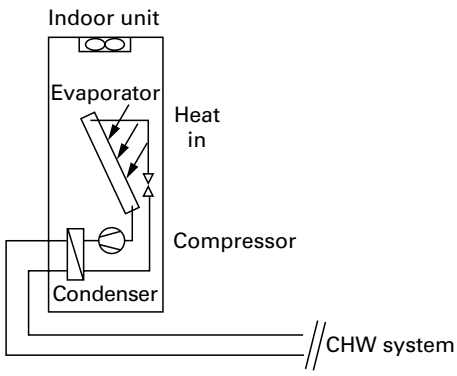

[5] DEFRA market Transformation Programme Air Conditioning Sector Model.

The following assumptions have been made in these scenarios:

- Electricity price 9p/kWh.
- Electricity CO_2 emission factor: 0.524 CO_2/kWh.
- Annual savings do not degrade.

Figure 9 *DX water cooled with integral chilled water free cooling coil(s) close control air conditioning units*

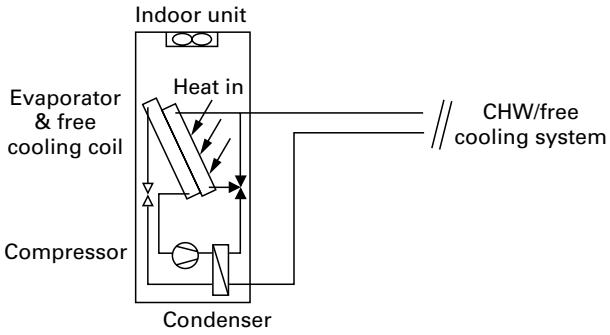

For the installation of an ETL listed 60 kW DX air-cooled close control air conditioning unit in place of an existing non ECA-listed unit, the potential annual savings are calculated as:

- £1,643.
- 18,250kWh.
- 9.6 tonnes CO_2.

Based on the following scenario:

- Installation of one 60kW DX air-cooled close control air conditioning unit with an average EER of 2.7.
- Replacement of a 60kW DX air-cooled close control air conditioning unit with an average EER of 2.4.
- The close control air conditioning unit operates for 365 days a year at an average load of 75%.

Chilled water (CHW) close control air conditioners

Chilled water (CHW) close control air conditioning units contain a chilled water cooling coil for connection to an external chilled water (CHW) circuit.

Figure 10 *Chilled water close control air conditioning unit*

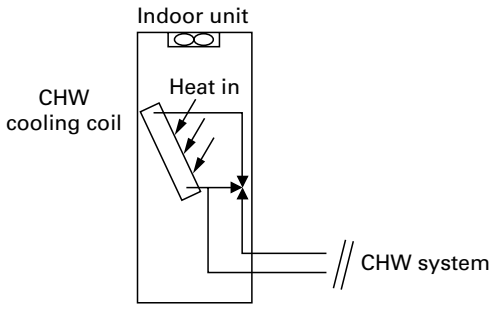

For the installation of an ETL listed 80kW chilled water close control air conditioning unit in place of an existing non ECA-listed unit, the potential annual savings are calculated as:

- £1,898.
- 21,087kWh.
- 11 tonnes CO_2.

Based on the following scenario:

- Installation of one 80kW chilled water close control air conditioning unit with an average EER of 16.7.
- Replacement of a 80kW chilled water close control air conditioning unit with an average EER of 10.0.
- The close control air conditioning unit operates for 365 days a year at an average load of 75%.

Go online to get more

The Carbon Trust provides a range of tools, services and information to help you implement energy and carbon saving measures, no matter what your level of experience.

Empower Savings Calculator

Calculate your organisation's potential carbon savings with our online calculator. Empower has been configured entirely around the employee, to help them see that through simple behavioural changes, their individual efforts add up to make a bigger difference. **www.carbontrust.com/resources/reports/advice/empower-savings-calculator**

Carbon Surveys

We provide surveys to organisations in Scotland and Wales with annual energy bills of more than £30,000*. Our carbon experts will visit your premises to identify energy saving opportunities and offer practical advice on how to achieve them. **www.carbontrust.com/client-services/scotland/carbon-survey-application**

Events and Workshops

The Carbon Trust offers a variety of events and workshops ranging from introductions to our services, to technical energy efficiency training, most of which are free in Scotland and Wales. **www.carbontrust.com/about-us/events**

Publications

We have a library of free publications detailing energy saving techniques for a range of sectors and technologies. **www.carbontrust.com/resources**

SME Network

An online community for SMEs with the aim of increasing the sharing of best practice between SMEs looking to reduce carbon emissions from their estate and operations. **http://smenetwork.carbontrust.com**

* Subject to terms and conditions.

The Carbon Trust is an independent, expert partner of leading organisations around the world, helping them contribute to and benefit from a more sustainable world.

Advice

- We advise businesses, governments and the public sector on their opportunities in a sustainable low carbon world

Footprinting

- We measure and certify the environmental footprint of organisations, products and services

Technology

- We help develop and deploy low carbon technologies and solutions, from energy efficiency to renewable power

www.carbontrust.com

+44 (0)207 170 7000

The Carbon Trust receives funds from the Department of Energy and Climate Change (DECC), the Scottish Government and the Welsh Government. The Enhanced Capital Allowance Scheme for energy saving equipment is run by the Carbon Trust on behalf of Government.

Published in the UK: October 2012.

CARBON TRUST